FASTENER DIMENSIONS

# DISTRIBUTED PRODUCTS

AEROSPACE FASTENERS DISTRIBUTOR

# DISTRIBUTION

*FASTENER DIMENSIONS, INC.* ISO9001, AS9100 & AS9120 Certified
6850 River Road, Pennsauken, New Jersey 08110
WEB: WWW.FASTDIM.COM • PHONE: 718-847-6321 • FAX: 718-847-8414

# FASTENER DIMENSIONS

REACHING NEW DIMENSIONS IN FASTENER TECHNOLOGY

***We have over 1,000,000 different line items in stock and ready to ship the same day. We maintain ITAR and EAR compliance. Worldwide shipping done daily.***

Fastener Dimensions has strategically placed sales offices on both the East Coast and the West Coast of the United States. Although we only have offices in the USA, we ship parts worldwide on a daily basis. We specialize in **AN**, **AS**, **DS**, **HS**, **MS**, **NAS**, **NASM**, **SS** (and small machined components).

We stock hardware from over 1000 manufacturers, with multiple authorized lines. We are the largest distributor of Rosan® hardware in the world.

**Bolts**
- AN, AS, DS, HS, MS, NA, NAS, NASM
- Hex-Head Bolts
- External Wrenching Bolts
- Internal Wrenching Bolts
- Spline-head Bolts
- Socket-head Cap Screws
- Custom Bolts to your Blueprint

**Screws**
- AN, AS, DS, HS, MS, NA, NAS, NASM
- Aircraft Grade, Close Tolerance
- Custom Screws to your Blueprint
- Pan Head, Flat Head, Oval Head, Fillister Head, Round Head and More Styles

**Nuts**
- AN, AS, DS, HS, MS, NA, NAS, NASM
- Hex Nuts
- Cap or Acorn Nuts
- Spanner Nuts
- Double Hex Nuts
- 10 pt Nuts
- Spline Drive Nuts
- Nut Plates
- Shank Nuts
- Anchor Nuts
- Gang Channel
- Barrel Nuts
- Bearing Lock Nuts and Washers

**Panel Fasteners for Composite Sandwich and Honeycomb**
- Inserts and Spacers
- Plugs and Sleeves
- Through-clearance or Blind-threaded
- Through-clearance or Through-threaded
- Floating or Non-floating
- Self-locking or Free-spinning
- Potted or Mechanically-installed
- Threaded or Non-threaded
- One-piece Solid or Two-piece Assemblies
- Self-adhesive Fasteners Available

**Expandable-Diameter Fasteners Assemblies**
- Blind Bolts
- Bolts
- Cam Actuate Shafts
- Shafts

**Fittings**
- AN, AS, DS, HS, MS, NA, NAS, NASM
- Rosan® Boss Fluid Inserts & Fittings
- Hydraulic Fluid Fittings High Pressure
- Hydraulic Tube Fittings

**Inserts**
- AN, AS, DS, HS, MS, NA, NAS, NASM
- Mil-Spec Inserts
- Rosan® * and Shur-Lok® ** Inserts
- Ring-locked Inserts and Lock Rings
- Rosan® Type Inserts*
- Swage-locked Inserts
- Key-locked Inserts
- Key Ring-locked Inserts
- Thin Wall Inserts
- All Type Inset Tooling
- Slimserts® *
- Kelox® *
- Sta-Lok® **

**Studs**
- AN, AS, DS, HS, MS, NA, NAS, NASM
- Double-ended Studs
- Key-locked Studs
- Key Ring Locked Studs
- Ring-locked Studs and Lock Rings
- Rosan® Type Studs*
- Size-on-size Studs

**Miscellaneous**
- Bead Chain Assemblies
- Bearings
- Bushings
- Clevis Pins
- Clips
- Collars
- Cotter Pins
- Decals
- Dowel Pins
- Electronic Hardware
- Felt Strips
- Gaskets
- Handles
- High-pressure Hose Assemblies
- Key Rings
- Knobs
- O-rings
- Ordnance Hardware
- Packings
- Plugs
- Quick-release Pins
- Rivets
- Rods
- Roll Pins
- Sash Chain
- Seals
- Self-clinching Hardware
- Set Screws
- Standoffs
- Spacers
- Spring Pins
- Vibration Isolation Mounts
- Washers
- Wire Rope Assemblies
- Zip Ties

***We specialize in hard-to-find items.***

*Fastener Dimensions Inc. is an independent distributor of the many brand name products that we sell and that appear in our literature.*
*Rosan®, Slimserts®, and Kelox® are registered trademarks of Alcoa® (AFS). †Loctite® is a registered trademark of the Henkel Corporation.
**Shur-Lok® and Sta-Lok® are registered trademarks of the Shur-Lok Company.

## Certified Manufacturer and Certified Distributor

With a combined 100 years' experience in the aerospace industry you can be assured you found the right source to supply your assembly lines. Fastener Dimensions, Inc. (FDI) proudly serves the Aircraft, Aerospace, Military, Defense, Medical, Transportation, Rail, Space and Racing Industries.

*FASTENER DIMENSIONS, INC.* ISO9001, AS9100 & AS9120 Certified
6850 River Road, Pennsauken, New Jersey 08110
WEB: WWW.FASTDIM.COM • PHONE: 718-847-6321 • FAX: 718-847-8414

FASTENER DIMENSIONS

# DISTRIBUTED PRODUCTS

AEROSPACE FASTENERS DISTRIBUTOR

## Aerospace Bolts

Established in 1989 as a family owned and operated company, Fastener Dimensions is a leading supplier of close-tolerance, aircraft grade, bolts, screws, and fasteners of all kinds.

Proudly serving the Aircraft, Aerospace, Space, Military and Defense, Medical, Transportation, Rail and Racing industries, we specialize in **AN**, **AS**, **DS**, **HS**, **MS**, **NA, NAS** and **NASM** bolts and screws.

We carry every popular head style plus an impressive selection of nonstandard and custom manufactured items available in a wide selection of materials.

FDI stocks multiple authorized lines from over 1,000 manufacturers and ships parts worldwide daily.

## Aerospace Screws

## Rosan®Type Fasteners

Fastener Dimensions supplies a broad selection of threaded inserts and studs, in both SAE and metric sizes, designed for use in high vibration applications, gear boxes, transmissions, jet engines and APU auxiliary power units. FDI also carries all of the tools necessary for hole preparation, installation, and removal of each of the products that we are authorized to distribute.

## Ring-Locked Fluid Fittings

FDI stocks a complete line of Beam Seal, Flareless, and Flared Adapters, plus Fluid Plugs, Insert Lock-rings, Fluid Boss Inserts, Fluid Fitting Caps, and Installation and Removal Tools (both SAE and Metric sizes are available). FDI is the largest distributor of Rosan® hardware in the world. We stock hardware from over 1,000 manufacturers, with multiple authorized lines.

## Standard Aerospace Fittings

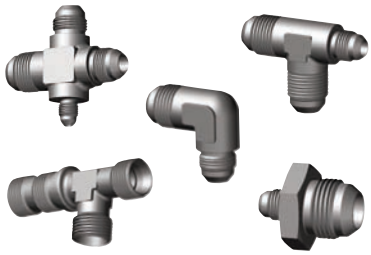

Fastener Dimensions is an AS9120 certified supplier of **AS**, **MS**, **NAS** and **AN** hydraulic, flared and flareless, tube fittings. We carry a full line of 3000 psi Fluid Connections in Corrosion-Resistant Steel, Titanium, Aluminum, 15 5 PH and Low Alloy Steel in bar and forged and are also available in a wide variety of alloys.

*FASTENER DIMENSIONS, INC.* ISO9001, AS9100 & AS9120 Certified
6850 River Road, Pennsauken, New Jersey 08110
WEB: WWW.FASTDIM.COM • PHONE: 718-847-6321 • FAX: 718-847-8414

# DISTRIBUTED PRODUCTS

AEROSPACE FASTENERS DISTRIBUTOR

## Nuts

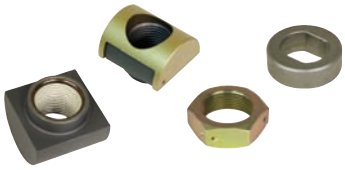

FDI, an ISO9001:2008 certified distributor, is a leading NAS supplier carrying a diverse range of fully traceable fasteners. Among our inventory you'll find: Anchor, Barrel, Castle, Chamfer Top, Clinch, Dome, Flexloc,® Heavy Flange, Hex, Heavy Hex, Jam, 12 Point, Self-Locking, Shank, Spline Nuts, plus Nut Plates and Gang Channels.

## E-Nut® Fasteners

New E-Nut® Fastening Systems provide high-strength, top-down, fastening systems for panels that use standard screws and conforms to a wide range of material depths. This weight saving system reduces scratching of panels during installations are self-expanding, self-aligning, self-locking and can be removed rapidly for reuse.

## Expandable Diam. Bolts

FDI stocks the Shur-Lok® brand of Expandable Diameter Fasteners. Unique to your individual application, each fastener is custom-engineered to expand in a hole thus preventing fretting (corrosion or wearing away). These unique bolts, blind bolts, shafts, and cam-actuated shafts can eliminate the need and extra expense of close tolerance machining or press-fit fasteners.

## Panel Fasteners

We stock Shur-Lok® brand Panel Fasteners for Sandwich Structure and Honeycomb Panels for aircraft interior secondary structure fabrications. We carry a wide variety of Externally Threaded, Internally Threaded, Non-threaded, Through or Blind, Ring-type, Tapered Shank, Positive-Locking, and Expanding Panel Fasteners, plus Advanced Composite Fasteners.

## Vibration Isolators

Vibration Isolator Mounts prevent vibrations, noise and heat from transferring into the interior of an aircraft. They are used in the mounting of engines or equipment inside between the exterior fuselage and interior passenger walls and the floor boards of the aircraft. For convenient removal these mounts are available with nuts with thread lock or quick-release receptacles.

*FASTENER DIMENSIONS, INC.* ISO9001, AS9100 & AS9120 Certified
6850 River Road, Pennsauken, New Jersey 08110
WEB: WWW.FASTDIM.COM • PHONE: 718-847-6321 • FAX: 718-847-8414

## Bearing Locknuts & Washers

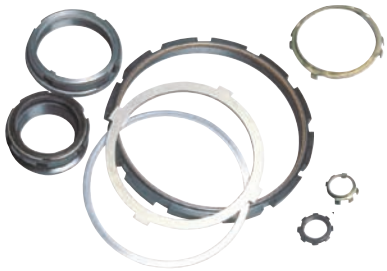

FDI carries a full line of bearing locknuts and washers designed to provide uncompromised holding power for shaft or spindle aircraft applications providing a secure lock in high torque and vibration conditions. They offer easier installation and adjustment than solid ring locking devices, can be had in advanced aerospace materials, and come in an assortment of sizes.

## Quick-release Pins

We offer a vast assortment of quick-release pins and fastening devices that utilize locking balls. They come as positive locking pins with single or double acting releases. Standard and Metric sizes are available. And they can also be had as non-positive detent, quick release pins. We also carry non-corrosive, stainless steel pins which are ideal for marine applications.

## Latches & Keepers

FDI supplies aircraft quality latching devices that come in a multitude of materials, configurations and strength capabilities. Adjustable or non-adjustable keepers and eyebolts can be adjusted for the desired preload. Slotted holes in the mounting plate allow for incremental adjustments. Special keeper housings are available for mounting. Gooseneck hinges allow for easier access.

## Struts/Hold Open Rods

We are a leading supplier of fixed-length, telescoping, scissor-folding, and special Struts / Hold-Open Rods. Designed to hold open doors, drawers, cowlings, metallic or composite materials these devices have secondary locking features and have high-tension and compression capabilities. They are available in a variety of easy-to-install styles.

## Bushings & Spacers

Aerospace Bushings and Spacers come in a wide variety of styles, thicknesses, diameters and materials. Fastener Dimensions stocks an enormous selection of **AN**, **NAS**, **MS**, **NASM**, **AS**, **HS**, **SS** and **BACB** bushings and spacers in different finishes, lengths and strength capabilities. We have the ability to deliver any of the bushings and spacers listed, ready to ship today.

GO TO

*FASTENER DIMENSIONS, INC.* ISO9001, AS9100 & AS9120 Certified
6850 River Road, Pennsauken, New Jersey 08110
WEB: WWW.FASTDIM.COM • PHONE: 718-847-6321 • FAX: 718-847-8414

FASTENER DIMENSIONS

# DISTRIBUTED PRODUCTS

AEROSPACE FASTENERS DISTRIBUTOR

Ring-Locked Inserts

Ring-Locked Studs

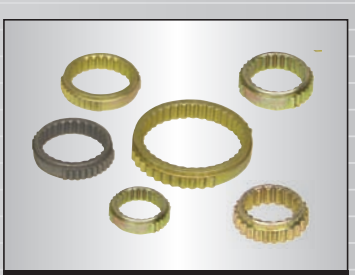

Lock Rings for Ring-Locked

Thin Wall/Swaged Inserts

Thin Wall/Swaged Tools

Ring-Locked Tools

Key-Locked/Staked Inserts

Key-Locked/Staked Studs

Key-Locked/Staked Tools

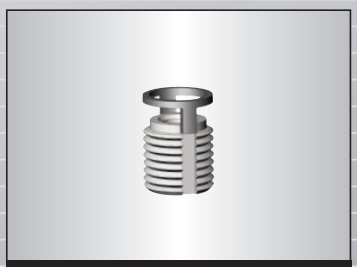

Key-Ring Inserts

Key-Ring Studs

Key-Ring Tools

# ROSAN® TYPE FASTENERS

Fastener Dimensions Inc. is the largest distributor of Rosan® type fasteners in the world.
We are an authorized Shur-Lok® distributor with Boeing D1-4426 authorization.

*FASTENER DIMENSIONS, INC.* ISO9001, AS9100 & AS9120 Certified
6850 River Road, Pennsauken, New Jersey 08110
WEB: WWW.FASTDIM.COM • PHONE: 718-847-6321 • FAX: 718-847-8414

FASTENER DIMENSIONS

# RING-LOCKED STUDS & INSERTS

AEROSPACE FASTENERS DISTRIBUTOR

## *Ring-locked Studs, Inserts and Lock-rings*

Used in mated pairs, Ring Locked Inserts and Studs are ideal for use in gear boxes, engines, pumps and vehicles in general. They provide excellent performance in high fatigue/high vibration applications. Their superior torsional resistance combined with a serrated Lockring, prevent the stud from backing out, in either soft or hard parent materials.

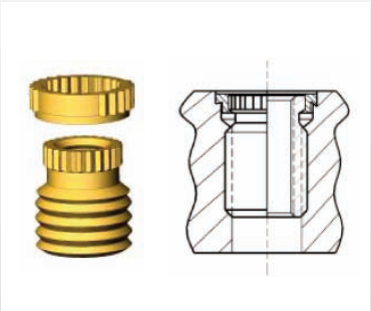

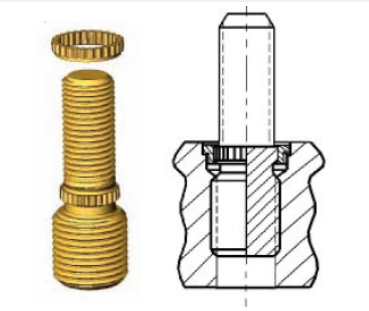

### Ring-locked Inserts

AS51991/MS51991
AS51993/MS51993
DOD-I-63276/1
MS51498
RDJ100-(X)
RJ200-(X)
RDJ200-(X)
RJ300-(X)
RJ900-(X)
RDJ900-(X)
R1000-(X)
R1100-(X)
RJ1200-(X)

RJ2000-(X)
RJ1700-(X)
RDJ3600-(X)
05-13008

### Ring-locked Studs

AS1561
AS1620
AS3319 – AS3322
AS51989/MS51989
AS51992/MS51992
DOD-S-63275/1
MS51497
MS51551
SHF-(X)
SFC-(X)
SFCH-(X)

### Lock Rings for Ring-locked Fasteners

AS51990
AS51997
DOD-S-63276/2
MS51990
MS51997
RR-(X)
RLRR-(X)
RL-(X)
RLRR1997-(X)
RLH-(X)S3C-(X)

### Ring-locked Inserts and Studs

- Standard and oversize styles available.
- Manufactured in both inch and metric threads.
- Solid configurations for plugs or special requirements.
- Hydraulic sealing configurations (low pressure)
- Produced in all common aerospace materials to MS, AN, NAS, SAE and other specifications.
- All styles available in standard configurations or with internal thread locking features.

*FASTENER DIMENSIONS, INC.* ISO9001, AS9100 & AS9120 Certified
6850 River Road, Pennsauken, New Jersey 08110
WEB: WWW.FASTDIM.COM • PHONE: 718-847-6321 • FAX: 718-847-8414

FASTENER DIMENSIONS

# RING-LOCKED STUDS & INSERTS

AEROSPACE FASTENERS DISTRIBUTOR

## *Ring-locked Studs, Inserts and Lock-rings*

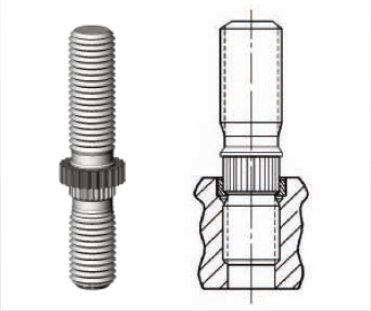

### Size-on-size Ring-locked Studs

| | | |
|---|---|---|
| AS3319 | AS3321 | SFC-(X) |
| AS3320 | AS3322 | SFCH-(X) |

Size-on-size studs are similar to ring locked studs except that both threads have the same nominal diameter allowing the stud to be installed into minimum size bosses.

| *Ring-Locked Studs & Inserts* | Ring-locked Inserts & Studs | | | | | | |
|---|---|---|---|---|---|---|---|
| | Stud | Size-on-size Stud | Hydraulic Stud | Insert | Captive Locking Insert | Polymide Resin Lock Insert | Hydraulic Insert |
| *Features and Benefits* | | | | | | | |
| Standard | ● | | | ● | | | |
| Includes Lock-ring | | ● | | | ● | | |
| Thread Lock | | | | ● | ● | ● | |
| Hydraulic Applications | | | ● | | | | ● |

## *Installation and Removal Tools*

Ring-locked Inserts and Studs require special tooling for installation and removal. FDI stocks the entire line of tools for your applications. A small selection of drive tools and wrenches are shown below.

***SPECIAL TOOLING REQUIRED***

*FASTENER DIMENSIONS, INC.* ISO9001, AS9100 & AS9120 Certified
6850 River Road, Pennsauken, New Jersey 08110
WEB: WWW.FASTDIM.COM • PHONE: 718-847-6321 • FAX: 718-847-8414

# MS51497

| MILITARY PART NUMBER | ROSAN PART NUMBER | SHUR-LOK PART NUMBER |
|---|---|---|
| MS51497D502-8 | SFR5902D502-8 | SLR5902D502-8 |
| MS51497D502-(9 thru 64) | SFR5902D502-(9 thru 64) | SLR5902D502-(9 thru 64) |
| MS51497D503-9 | SFR5902D502-(9 thru 64) | SLR5902D502-(9 thru 64) |
| MS51497D503-10 | SFR5902D503-10 | SLR5902D503-10 |
| MS51497D503-11 | SFR9502D503-11 | SLR9502D503-11 |
| MS51497D503-(12 thru 64) | SFR5902D503-(12 thru 64) | SLR5902D503-(12 thru 64) |
| MS51497D504-11 | SFR5902D504-11 | SLR5902D504-11 |
| MS51497D504-12 | SFR5902D504-12 | SLR5902D504-12 |
| MS51497D504-(13 thru 64) | SFR59020504-(13 thru 64) | SLR59020504-(13 thru 64) |
| MS51497D505-12 | SFR5902D505-12 | SLR5902D505-12 |
| MS51497D505-13 | SFR5902D505-13 | SLR5902D505-13 |
| MS51497D505-(14 thru 64) | SFR9502D505-(14 thru 64) | SLR9502D505-(14 thru 64) |
| MS51497D506-15 | SFR5902D506-15 | SLR5902D506-15 |
| MS51497D506-(16 thru 64) | SFR590D2506-(16 thru 64) | SLR590D2506-(16 thru 64) |
| MS51497D507-16 | SFR5902D507-16 | SLR5902D507-16 |
| MS514970507-(17 thru 64) | SFR5902D507-(17 thru 64) | SLR5902D507-(17 thru 64) |
| MS51497D508-18 | SFR5902D508-18 | SLR5902D508-18 |
| MSS14970508-(19 thru 64) | SFR5902D508-(19 thru 64) | SLR5902D508-(19 thru 64) |
| MS51497E502-8 | SFR5902E502-8 | SLR5902E502-8 |
| MS51497E502-(9 thru 64) | SFR5902E502-(9 thru 64) | SLR5902E502-(9 thru 64) |
| MS51497E503-9 | SFR5902E503-9 | SLR5902E503-9 |
| MS51497E503-10 | SFR5902E503-10 | SLR5902E503-10 |
| MS51497E50113-11 | SFR5902E503-11 | SLR5902E503-11 |
| MS5149E7503-(12 thru 64) | SFR5902E503-(12 thru 64) | SLR5902E503-(12 thru 64) |
| MS51497E504-11 | SFR5902E504-11 | SLR5902E504-11 |
| MS51497E504-12 | SFR5902E504-12 | SLR5902E504-12 |
| MS51497E504-(13 thru 64) | SFR9502E504-(13 thru 64) | SLR9502E504-(13 thru 64) |
| MS51497E505-12 | SFR5902E505-12 | SFL5902E505-12 |
| MS51497E505-13 | SFR5902E505-13 | SLR5902E505-13 |
| MS51497E505-(14 thru 64) | SFR5902E505-(14 thru 64) | SLR5902E505-(14 thru 64) |
| MS51497E506-15 | SFR5902E506-15 | SLR5902E506-15 |
| MS51497E506-(16 thru 64) | SFR9502E506-(16 thru 64) | SLR9502E506-(16 thru 64) |
| MS51497E507-16 | SFR5902E507-16 | SLR5902E507-16 |
| MS5149E7507-(17 thru 64) | SFR5902E507-(17 thru 64) | SLR5902E507-(17 thru 64) |
| MS51497E508-18 | SFR5902E508-18 | SLR5902E508-18 |
| MS5149E7508-(19 thru 64) | SFR5902E508-(19 thru 64) | SLR5902E508-(19 thru 64) |
| MS51497E642-8 | SFR5902E642-8 | SLR5902E642-8 |
| MS51497E642-(9 thru 64) | SFR5902E642-(9 thru 64) | SLR5902E642-(9 thru 64) |



*FASTENER DIMENSIONS, INC.* ISO9001, AS9100 & AS9120 Certified
6850 River Road, Pennsauken, New Jersey 08110
WEB: WWW.FASTDIM.COM • PHONE: 718-847-6321 • FAX: 718-847-8414

# MS51497

| MILITARY PART NUMBER | ROSAN PART NUMBER | SHUR-LOK PART NUMBER |
|---|---|---|
| MS51497E643-9 | SFR5902E643-9 | SLR5902E643-9 |
| MS51497E643-10 | SFR59026E43-10 | SLR59026E43-10 |
| MS51497E643-11 | SFR5902E643-11 | SLR5902E643-11 |
| MS5149E7643-(12 thru 64) | SFR5902E643-(12 thru 64) | SLR5902E643-(12 thru 64) |
| MS51497E644-11 | SFR5902E644-11 | SLR5902E644-11 |
| MS5149E7644-12 | SFR5902E644-12 | SLR5902E644-12 |
| MS51497E464-(13 thru 64) | SFR5902E644-(13 thru 64) | SLR5902E644-(13 thru 64) |
| MS5149E7645-12 | SFR5902E645-12 | SLR5902E645-12 |
| MS51497E645-13 | SFR5902E645-13 | SLR5902E645-13 |
| MS514976E45-(14 thru 64) | SFR5902E645-(14 thru 64) | SLR5902E645-(14 thru 64) |
| MS5149E7646-15 | SFR5902E646-15 | SLR5902E646-15 |
| MS51497E646-(16 thru 64) | SFR5902E646-(16 thru 64) | SLR5902E646-(16 thru 64) |
| MS5149E7647-16 | SFR5902E647-16 | SLR5902E647-16 |
| MS51497E647-(17 thru 64) | SFR590E2647-(17 thru 64) | SLR590E2647-(17 thru 64) |
| MS5149E7648-18 | SFR5902E648-18 | SLR5902E648-18 |
| MS51497E648-(19 thru 64) | SFR5902E648-(19 thru 64)) | SLR5902E648-(19 thru 64) |
| MS5149E7508-(19 thru 64) | SFR5902E508-(19 thru 64) | SLR5902E508-(19 thru 64) |
| MS51497E642-8 | SFR5902E642-8 | SLR5902E642-8 |
| MS51497E642-(9 thru 64) | SFR5902E642-(9 thru 64) | SLR5902E642-(9 thru 64) |
| MS51497E643-9 | SFR5902E643-9 | SLR5902E643-9 |
| MS51497E643-10 | SFR59026E43-10 | SLR59026E43-10 |
| MS51497E643-11 | SFR5902E643-11 | SLR5902E643-11 |
| MS5149E7643-(12 thru 64) | SFR5902E643-(12 thru 64) | SLR5902E643-(12 thru 64) |
| MS51497E644-11 | SFR5902E644-11 | SLR5902E644-11 |
| MS5149E7644-12 | SFR5902E644-12 | SLR5902E644-12 |
| MS51497E464-(13 thru 64) | SFR5902E644-(13 thru 64) | SLR5902E644-(13 thru 64) |
| MS5149E7645-12 | SFR5902E645-12 | SLR5902E645-12 |
| MS51497E645-13 | SFR5902E645-13 | SLR5902E645-13 |
| MS514976E45-(14 thru 64) | SFR5902E645-(14 thru 64) | SLR5902E645-(14 thru 64) |
| MS5149E7646-15 | SFR5902E646-15 | SLR5902E646-15 |
| MS5149E7646-16 | SFR5902E646-16 | SLR5902E646-16 |
| MS5149E7647-16 | SFR5902E647-16 | SLR5902E647-16 |
| MS51497E647-(17 thru 64) | SFR590E2647-(17 thru 64) | SLR590E2647-(17 thru 64) |
| MS5149E7648-18 | SFR5902E648-18 | SLR5902E648-18 |
| MS51497E648-(19 thru 64) | SFR5902E648-(19 thru 64) | SLR5902E648-(19 thru 64) |
| MS51497A642-8 | SFR5902A642-8 | SLR5902A642-8 |
| MS51497A642-(9 thru 64) | SFR5902A642-(9 thru 64) | SLR5902A642-(9 thru 64) |
| MS51497A643-9 | SFR5902A643-9 | SLR5902A643-9 |



*FASTENER DIMENSIONS, INC.* ISO9001, AS9100 & AS9120 Certified
6850 River Road, Pennsauken, New Jersey 08110
WEB: WWW.FASTDIM.COM • PHONE: 718-847-6321 • FAX: 718-847-8414

# MS51497

| MILITARY PART NUMBER | ROSAN PART NUMBER | SHUR-LOK PART NUMBER |
|---|---|---|
| MS51497A643-10 | SFR5902A643-10 | SLR5902A643-10 |
| MS51497A643-11 | SFR5902A643-11 | SLR5902A643-11 |
| MS514976A43-(12 thru 64) | SFR5902A643-(12 thru 64) | SLR5902A643-(12 thru 64) |
| MS51497A644-11 | SFR5902A644-11 | SLR5902A644-11 |
| MS51497A644-12 | SFR5902A644-12 | SLR5902A644-12 |
| MS51497A644-(13 thru 64) | SFR5902A644-(13 thru 64) | SLR5902A644-(13 thru 64) |
| MS514976A45-12 | SFR5902A645-12 | SLR5902A645-12 |
| MS51497A645-13 | SFR5902A645-13 | SLR5902A645-13 |
| MS514976A45-(14 thru 64) | SFR5092A645-(14 thru 64) | SLR5092A645-(14 thru 64) |
| MS51497A646-15 | SFR5902A646-15 | SLR5902A646-15 |
| MS51497A646-(16 thru 64) | SFR5902A646-(16 thru 64) | SLR5902A646-(16 thru 64) |
| MS51497A647-16 | SFR5902A647-16 | SLR5902A647-16 |
| MS51497A647-(17 thru 64) | SFR5920A647-(17 thru 64) | SLR5920A647-(17 thru 64) |
| MS514976A48-18 | SFR5902A648-18 | SLR5902A648-18 |
| MS51497A648-(19 thru 64) | SFR5902A648-(19 thru 64) | SLR5902A648-(19 thru 64) |
| MS51497A802-8 | SFR5902A802-8 | SLR5902A802-8 |
| MS51497A802-(9 thru 64) | SFR5902A802-(9 thru 64) | SLR5902A802-(9 thru 64) |
| MS51497A803-9 | SFR5902A803-9 | SFL5902A803-9 |
| MS51497A803-10 | SFR5902A803-10 | SLR5902A803-10 |
| MS51497A803-11 | SFR5902A803-11 | SLR5902A803-11 |
| MS51497A803-(12 thru 64) | SFR5920A803-(12 thru 64) | SLR5920A803-(12 thru 64) |
| MS51497A804-11 | SFR5902A804-11 | SLR5902A804-11 |
| MS51497A804-12 | SFR5902A804-12 | SLR5902A804-12 |



*FASTENER DIMENSIONS, INC.* ISO9001, AS9100 & AS9120 Certified
6850 River Road, Pennsauken, New Jersey 08110
WEB: WWW.FASTDIM.COM • PHONE: 718-847-6321 • FAX: 718-847-8414

# MS51551

| MILITARY PART NUMBER | ROSAN PART NUMBER | SHUR-LOK PART NUMBER |
|---|---|---|
| MS51551D103-(11 thru 24) | S10FJ81-6SA-(11 thru 24)A | SL10FJ81-6SA-(11 thru 24)A |
| MS51551D103A-(11 thru 24) | S10FJ81-8SA-(11 thru 24)A | SL10FJ81-8SA-(11 thru 24)A |
| MS51551D103B-(11 thru 24) | S10FJ81-10SA-(11 thru 24)A | SL10FJ81-10SA-(11 thru 24)A |
| MS51551D104-(11 thru 54) | S10FJ91-7SA-(11 thru 54)A | SL10FJ91-7SA-(11 thru 54)A |
| MS51551D104A-(11 thru 54) | S10FJ91-9SA-(11 thru 54)A | SL10FJ91-9SA-(11 thru 54)A |
| MS51551D104B-(11 thru 54) | S10FJ91-11SA-(11 thru 54)A | SL10FJ91-11SA-(11 thru 54)A |
| MS51551D105-(12 thru 64) | S11FJ101-9SA-(12 thru 64)A | SL11FJ101-9SA-(12 thru 64)A |
| MS51551D105A-(12 thru 64) | S11FJ101-11SA-(12 thru 64)A | SL11FJ101-11SA-(12 thru 64)A |
| MS51551D105B-(12 thru 64) | S11FJ101-13SA-(12 thru 64)A | SL11FJ101-13SA-(12 thru 64)A |
| MS51551D106-(13 thru 64) | S12FJ111-11SA-(13 thru 64)A | SL12FJ111-11SA-(13 thru 64)A |
| MS51551D106A-(13 thru 64) | S12FJ111-14SA-(13 thru 64)A | SL12FJ111-14SA-(13 thru 64)A |
| MS51551D106B-(13 thru 64) | S12FJ111-17SA-(13 thru 64)A | SL12FJ111-17SA-(13 thru 64)A |
| MS51551D107-(14 thru 64) | S13FJ121-12SA-(14 thru 64)A | SL13FJ121-12SA-(14 thru 64)A |
| MS51551D107A-(14 thru 64) | S13FJ121-15SA-(14 thru 64)A | SL13FJ121-15SA-(14 thru 64)A |
| MS51551D107B-(14 thru 64) | S13FJ121-18SA-(14 thru 64)A | SL13FJ121-18SA-(14 thru 64)A |
| MS51551D108-(15 thru 54) | S14FJ131-13SA-(15 thru 54)A | SL14FJ131-13SA-(15 thru 54)A |
| MS51551D108A-(15 thru 54) | S13FJ131-16SA-(15 thru 54)A | SL14FJ131-16SA-(15 thru 54)A |
| MS51551D108B-(15 thru 54) | S13FJ131-19SA-(15 thru 54)A | SL14FJ131-19SA-(15 thru 54)A |
| MS51551D109-(17 thru 54) | S14FJ141-14SA-(17 thru 54)A | SL16FJ141-14SA-(17 thru 54)A |
| MS51551D109A-(17 thru 54) | S13FJ141-17SA-(17 thru 54)A | SL16FJ141-17SA-(17 thru 54)A |
| MS51551D109B-(17 thru 54) | S13FJ141-21SA-(17 thru 54)A | SL16FJ141-21SA-(17 thru 54)A |

# MS51989

| MILITARY PART NUMBER | ROSAN PART NUMBER | SHUR-LOK PART NUMBER |
|---|---|---|
| MS51989-102-(L) | SF71-4SA(*)A | SLF71-4SA(L)A |
| MS51989-103-(L) | SF81-6SA(*)A | SLF81-6SA(L)A |
| MS51989-104-(L) | SF91-7SA(*)A | SLF91-7SA(L)A |
| MS51989-105-(L) | SF101-9SA(*)A | SLF101-9SA(L)A |
| MS51989-106-(L) | SF111-11SA(*)A | SLF111-11SA(L)A |
| MS51989-107-(L) | SF121-12SA(*)A | SLF121-12SA(L)A |
| MS51989-108-(L) | SF131-13SA(*)A | SLF131-13SA(L)A |
| MS51989-109-(L) | SF141-14SA(*)A | SLF141-14SA(L)A |
| MS51989-110-(L) | SF151-16SA(*)A | SLF151-16SA(L)A |
| MS51989-111-(L) | SF161-18SA(*)A | SLF161-18SA(L)A |
| MS51989-112-(L) | SF181-21SA(*)A | SLF181-21SA(L)A |
| MS51989-202-(L) | SF72-4SA(*)A | SLF72-4SA(L)A |
| MS51989-203-(L) | SF82-6SA(*)A | SLF82-6SA(L)A |
| MS51989-204-(L) | SF92-7SA(*)A | SLF92-7SA(L)A |
| MS51989-205-(L) | SF102-9SA(*)A | SLF102-9SA(L)A |
| MS51989-206-(L) | SF112-11SA(*)A | SLF112-11SA(L)A |
| MS51989-207-(L) | SF122-12SA(*)A | SLF122-12SA(L)A |
| MS51989-208-(L) | SF132-13SA(*)A | SLF132-13SA(L)A |
| MS51989-209-(L) | SF142-14SA(*)A | SLF142-14SA(L)A |
| MS51989-210-(L) | SF152-16SA(*)A | SLF152-16SA(L)A |
| MS51989-211-(L) | SF162-18SA(*)A | SLF162-18SA(L)A |
| MS51989-212-(L) | SF182-21SA(*)A | SLF182-21SA(L)A |
| MS51989-302-(L) | SC71-4SA(*)A | SLC71-4SA(L)A |
| MS51989-303-(L) | SC81-6SA(*)A | SLC81-6SA(L)A |
| MS51989-304-(L) | SC91-7SA(*)A | SLC91-7SA(L)A |
| MS51989-305-(L) | SC101-9SA(*)A | SLC101-9SA(L)A |
| MS51989-306-(L) | SC111-11SA(*)A | SLC111-11SA(L)A |
| MS51989-307-(L) | SC121-12SA(*)A | SLC121-12SA(L)A |
| MS51989-308-(L) | SC131-13SA(*)A | SLC131-13SA(L)A |
| MS51989-309-(L) | SC141-14SA(*)A | SLC141-14SA(L)A |
| MS51989-310-(L) | SC151-16SA(*)A | SLC151-16SA(L)A |
| MS51989-311-(L) | SC161-18SA(*)A | SLC161-18SA(L)A |
| MS51989-312-(L) | SC181-18SA(*)A | SLC181-21SA(L)A |
| MS51989-402-(L) | SC72-4SA(*)A | SLC72-4SA(L)A |
| MS51989-403-(L) | SC82-6SA(*)A | SLC82-6SA(L)A |
| MS51989-404-(L) | SC92-7SA(*)A | SLC92-7SA(L)A |
| MS51989-405-(L) | SC102-9SA(*)A | SLC102-9SA(L)A |
| MS51989-406-(L) | SC112-11SA(*)A | SLC112-11SA(L)A |



*FASTENER DIMENSIONS, INC.* ISO9001, AS9100 & AS9120 Certified
6850 River Road, Pennsauken, New Jersey 08110
WEB: WWW.FASTDIM.COM • PHONE: 718-847-6321 • FAX: 718-847-8414

# MS51989

| MILITARY PART NUMBER | ROSAN PART NUMBER | SHUR-LOK PART NUMBER |
|---|---|---|
| MS51989-407-(L) | SC122-12SA(*)A | SLC122-12SA(L)A |
| MS51989-408-(L) | SC132-13SA(*)A | SLC132-13SA(L)A |
| MS51989-409-(L) | SC142-14SA(*)A | SLC142-14SA(L)A |
| MS51989-410-(L) | SC152-16SA(*)A | SLC152-16SA(L)A |
| MS51989-411-(L) | SC162-18SA(*)A | SLC162-18SA(L)A |
| MS51989-412-(L) | SC162-21SA(*)A | SLC182-21SA(L)A |



*FASTENER DIMENSIONS, INC.* ISO9001, AS9100 & AS9120 Certified
6850 River Road, Pennsauken, New Jersey 08110
WEB: WWW.FASTDIM.COM • PHONE: 718-847-6321 • FAX: 718-847-8414

# MS51989

| MILITARY PART NUMBER | ROSAN PART NUMBER | SHUR-LOK PART NUMBER |
|---|---|---|
| MS51990-102P | RLRR16SB5 | SLRR16SB5 |
| MS51990-103P | RLRR18SB6 | SLRR18SB6 |
| MS51990-104P | RLRR21SB6 | SLRR21SB6 |
| MS51990-105P | RLRR24SB7 | SLRR24SB7 |
| MS51990-106P | RLRR28SB8 | SLRR28SB8 |
| MS51990-107P | RLRR33SB9 | SLRR33SB9 |
| MS51990-108P | RLRR38SB9 | SLRR38SB9 |
| MS51990-109P | RLRR47SB10 | SLRR47SB10 |
| MS51990-110P | RLRR56SB11 | SLRR56SB11 |
| MS51990-111P | RLRR64SB11 | SLRR64SB11 |
| MS51990-112P | RLRR72SB11 | SLRR72SB11 |
| MS51990-113P | RLRR82SB12 | SLRR82SB12 |
| MS51990-114P | RLRR90SB12 | SLRR90SB12 |
| MS51990E102P | RLRR16SU5 | SLRR16SU5 |
| MS51990E103P | RLRR18SU6 | SLRR18SU6 |
| MS51990E104P | RLRR21SU6 | SLRR21SU6 |
| MS51990E105P | RLRR24SU7 | SLRR24SU7 |
| MS51990E106P | RLRR28SU8 | SLRR28SU8 |
| MS51990E107P | RLRR33SU9 | SLRR33SU9 |
| MS51990E108P | RLRR38SU9 | SLRR38SU9 |
| MS51990E109P | RLRR47SU10 | SLRR47SU10 |
| MS51990E110P | RLRR56SU11 | SLRR56SU11 |
| MS51990E111P | RLRR64SU11 | SLRR64SU11 |
| MS51990E112P | RLRR72SU11 | SLRR72SU11 |
| MS51990E113P | RLRR82SU12 | SLRR82SU12 |
| MS51990E114P | RLRR90SU12 | SLRR90SU12 |



*FASTENER DIMENSIONS, INC.* ISO9001, AS9100 & AS9120 Certified
6850 River Road, Pennsauken, New Jersey 08110
WEB: WWW.FASTDIM.COM • PHONE: 718-847-6321 • FAX: 718-847-8414

# MS51992

| MILITARY PART NUMBER | ROSAN PART NUMBER | SHUR-LOK PART NUMBER |
|---|---|---|
| MS51992C642-(9 thru 64) | SF5902C642-(9 thru 64) | SLF5902C642-(11 thru 64) |
| MS51992C643-(12 thru 64) | SF5902C643-(12 thru 64) | SLF5902C643-(13 thru 64) |
| MS51992C644-(13 thru 64) | SF5902C644-(13 thru 64) | SLF5902C644-(15 thru 64) |
| MS51992C645-(14 thru 64) | SF5902C645-(14 thru 64) | SLF5902C645-(16 thru 64) |
| MS51992C646-(17 thru 64) | SF5902C646-(16 thru 64) | SLF5902C646-(17 thru 64) |
| MS51992C647-(18 thru 64) | SF5902C647-(17 thru 64) | SLF5902C647-(18 thru 64) |
| MS51992C648-(19 thru 64) | SF5902C648-(19 thru 64) | SLF5902C648-(21 thru 64) |
| MS51992C802-(11 thru 64) | SF5902C802- (9 thru 64) | SLF5902C802-(11 thru 64) |
| MS51992C803-(13 thru 64) | SF5902C803-(12 thru 64) | SLF5902C803-(13 thru 64) |
| MS51992C804-(15 thru 64) | SF5902C804-(13 thru 64) | SLF5902C804-(15 thru 64) |
| MS51992C805-(16 thru 64) | SF5902C805-(14 thru 64) | SLF5902C805-(16 thru 64) |
| MS51992C806-(17 thru 64) | SF5902C805-(14 thru 64) | SLF5902C806-(17 thru 64) |
| MS51992C807-(18 thru 64) | SF5902C807-(17 thru 64) | SLF5902C807-(18 thru 64) |
| MS51992C808-(21 thru 64) | SF5902C808-(19 thru 64) | SLF5902C808-(21 thru 64) |
| MS51992C502-(11 thru 64) | SF59028052- (9 thru 64) | SLF5902C502-(11 thru 64) |
| MS51992C503-(13 thru 64) | SF5902B503-(12 thru 64) | SLF5902C503-(13 thru 64) |
| MS51992C504-(15 thru 64) | SF59028504-(13 thru 64) | SLF5902C504-(15 thru 64) |
| MS51992C505-(16 thru 64) | SF59028505-(14 thru 64) | SLF5902C505-(16 thru 64) |
| MS51992C506-(17 thru 64) | SF59028506-(16 thru 64) | SLF5902C506-(17 thru 64) |
| MS51992C507-(18 thru 64) | SF59028507-(17 thru 64) | SLF5902C507-(18 thru 64) |
| MS51992C508-(21 thru 64) | SF59028508-(19 thru 64) | SLF5902C508-(21 thru 64) |
| MS51992C502-(8 thru 10) | SF5902C502-(8 thru 10) | SLFT5902C502-(8 thru 10) |
| MS51992C503-(9 thru 12) | SF5902C502-(9 thru 12) | SLFT5902C503-(9 thru 12) |
| MS51992C504-(11 thru 14) | SF5902C504-(11 thru 14) | SLFT5902C504-(11 thru 15) |
| MS51992C505-(12 thru 15) | SF5902C505-(12 thru 15) | SLFT5902C505-(12 thru 15) |
| MS51992C506-(15 thru 18) | SF5902C506-(15 thru 18) | SLFT5902C506-(15 thru 18) |
| MS51992C507-(16 thru 17) | SF5902C507-(16 thru 17) | SLFT5902C507-(16 thru 17) |
| MS51992C508-(18 thru 20) | SF5902C508-(18 thru 20) | SLFT5902C508-(18 thru 20) |
| MS51992C642-(8 thru 10) | SF5902C642-(8 thru 10) | SLFT5902C642-(8 thru 10) |
| MS51992C643-(9 thru 12) | SF5902C643-(9 thru 12) | SLFT5902C643-(9 thru 12) |
| MS51992C644-(11 thru 14) | SF5902C644-(11 thru 14) | SLFT5902C644-(11 thru 14) |
| MS51992C645-(12 thru 15) | SF5902C645-(12 thru 15) | SLFT5902C645-(12 thru 15) |
| MS51992C646-(15 thru 18) | SF5902C646-(15 thru 18) | SLFT5902C646-(15 thru 18) |
| MS51992C647-(16 thru 17) | SF5902C647-(16 thru 17) | SLFT5902C647-(16 thru 17) |
| MS51992C648-(18 thru 20) | SF5902C648-(18 thru 20) | SLFT5902C648-(18 thru 20) |
| MS51992C802-(8 thru 10) | SF5902C802-(8 thru 10) | SLFT5902C802-(8 thru 10) |
| MS51992C803-(9 thru 12) | SF5902C803-(9 thru 12) | SLFT5902C803-(9 thru 12) |
| MS51992C804-(11 thru 14) | SF5902C804-(11 thru 14) | SLFT5902C804-(11 thru 14) |



*FASTENER DIMENSIONS, INC.* ISO9001, AS9100 & AS9120 Certified
6850 River Road, Pennsauken, New Jersey 08110
WEB: WWW.FASTDIM.COM • PHONE: 718-847-6321 • FAX: 718-847-8414

# MS51992

| MILITARY PART NUMBER | ROSAN PART NUMBER | SHUR-LOK PART NUMBER |
|---|---|---|
| MS51992C805-(12 thru 15) | SF5902C805-(12 thru 15) | SLFT5902C805-(12 thru 15) |
| MS51992C806-(15 thru 18) | SF5902C806-(15 thru 18) | SLFT5902C806-(15 thru 18) |
| MS51992C807-(16 thru 17) | SF5902C807-(16 thru 17) | SLFT5902C807-(16 thru 17) |
| MS51992C808-(18 thru 20) | SF5902C808-(18 thru 20) | SLFT5902C808-(18 thru 20) |
| MS51992D502-8 | SFT5902D502-8 | SLT5902D502-8 |
| MS51992D502-(9 thru 64) | SF5902D502-(9 thru 64) | SL5902D502-(9 thru 64) |
| MS51992D503-9 | SFT5902D503-9 | SLT5902D503-9 |
| MS51992D503-10 | SFT5902D503-10 | SLT5902D503-10 |
| MS51992D503-11 | SFT5902D503-11 | SLT5902D503-11 |
| MS51992D504-(12 thru 64) | SF5902D503-(12 thru 64) | SL5902D503-(12 thru 64) |
| MS51992D504-11 | SFT5902D504-11 | SLT5902D504-11 |
| MS51992D504-12 | SFT5902D504-12 | SLT5902D504-12 |
| MS51992D504-(13 thru 64) | SF5902D504-(13 thru 64) | SL5902D504-(13 thru 64) |
| MS51992D505-12 | SFT5902D505-12 | SLT5902D505-12 |
| MS51992D505-13 | SFT5902D505-13 | SLT5902D505-13 |
| MS51992D505-(14 thru 64) | SF5902D505-(14 thru 64) | SL5902D505-(14 thru 64) |
| MS51992D506-15 | SFT5902D506-15 | SLT5902D506-15 |
| MS51992D506-(16 thru 64) | SF5902D506-(16 thru 64) | SL5902D506-(16 thru 64) |
| MS51992D507-16 | SFT5902D507-16 | SLT5902D507-16 |
| MS51992D507-(17 thru 64) | SF5902D507-(17 thru 64) | SL5902D507-(17 thru 64) |
| MS51992D508-18 | SFT5902D508-18 | SLT5902D508-18 |
| MS51992D508-(19 thru 64) | SF5902D508-(19 thru 64) | SL5902D508-(19 thru 64) |
| MS51992E502-8 | SFT5902E502-8 | SLT5902E502-8 |
| MS51992E502-(9 thru 64) | SF5902E502-(9 thru 64) | SL5902E502-(9 thru 64) |
| MS51992E503-9 | SFT5902E503-9 | SLT5902E503-9 |
| MS51992E503-10 | SFT5902E503-10 | SLT5902E503-10 |
| MS51992E503-11 | SFT5902E503-11 | SLT5902E503-11 |
| MS51992E503-(12 thru 64) | SF5902E503-(12 thru 64) | SL5902E503-(12 thru 64) |
| MS51992E504-11 | SFT5902E504-11 | SLT5902E504-11 |
| MS51992E504-12 | SFT5902E504-12 | SLT5902E504-12 |
| MS51992E504-(13 thru 64) | SF5902E504-(13 thru 64) | SL5902E504-(13 thru 64) |
| MS51992E505-12 | SFT5902E505-12 | SLT5902E505-12 |
| MS51992E505-13 | SFT5902E505-13 | SLT5902E505-13 |
| MS51992E505-(14 thru 64) | SF5902E505-(14 thru 64) | SL5902E505-(14 thru 64) |
| MS51992E506-15 | SFT5902E506-15 | SLT5902E506-15 |
| MS51992E506-(16 thru 64) | SF5902E506-(16 thru 64) | SL5902E506-(16 thru 64) |
| MS51992E507-16 | SFT5902E507-16 | SLT5902E507-16 |
| MS51992E507-(17 thru 64) | SF5902E507-(17 thru 64) | SL5902E507-(17 thru 64) |



*FASTENER DIMENSIONS, INC.* ISO9001, AS9100 & AS9120 Certified
6850 River Road, Pennsauken, New Jersey 08110
WEB: WWW.FASTDIM.COM • PHONE: 718-847-6321 • FAX: 718-847-8414

# MS51992

| MILITARY PART NUMBER | ROSAN PART NUMBER | SHUR-LOK PART NUMBER |
|---|---|---|
| MS51992E508-18 | SFT5902E508-18 | SLT5902E508-18 |
| MS51992E508-(19 thru 64) | SF5902E508-(19 thru 64) | SL5902E508-(19 thru 64) |
| MS51992E642-8 | SFT5902E642-8 | SLT5902E642-8 |
| MS51992E642-(9 thru 64) | SF5902E642-(9 thru 64) | SL5902E642-(9 thru 64) |
| MS51992E643-9 | SFT5902E643-9 | SLT5902E643-9 |
| MS51992E643-10 | SFT5902E643-10 | SLT5902E643-10 |
| MS51992E643-11 | SFT5902E643-11 | SLT5902E643-11 |
| MS51992E643-(12 thru 64) | SF5902E643-(12 thru 64) | SL5902E643-(12 thru 64) |
| MS51992E644-11 | SFT5902E644-11 | SLT5902E644-11 |
| MS51992E644-12 | SFT5902E644-12 | SLT5902E644-12 |
| MS51992E644-(13 thru 64) | SF5902E644-(13 thru 64) | SL5902E644-(13 thru 64) |
| MS51992E645-12 | SFT5902E645-12 | SLT5902E645-12 |
| MS51992E645-13 | SFT5902E645-13 | SLT5902E645-13 |
| MS51992E645-(14 thru 64) | SF5902E645-(14 thru 64) | SL5902E645-(14 thru 64) |
| MS51992E646-15 | SFT5902E646-15 | SLT5902E646-15 |
| MS51992E646-(16 thru 64) | SF5902E646-(16 thru 64) | SL5902E646-(16 thru 64) |
| MS51992E647-16 | SFT5902E647-16 | SLT5902E647-16 |
| MS51992E647-(17 thru 64) | SF5902E647-(17 thru 64) | SL5902E647-(17 thru 64) |
| MS51992E648-18 | SFT5902E648-18 | SLT5902E648-18 |
| MS51992E648-(19 thru 64) | SF5902E648-(19 thru 64) | SL5902E648-(19 thru 64) |
| MS51992E802-8 | SFT5902E802-8 | SLT5902E802-8 |
| MS51992E802-(9 thru 64) | SF5902E802-(9 thru 64) | SL5902E802-(9 thru 64) |
| MS51992E803-9 | SFT5902E803-9 | SLT5902E803-9 |
| MS51992E803-10 | SFT5902E803-10 | SLT5902E803-10 |
| MS51992E803-11 | SFT5902E803-11 | SLT5902E803-11 |
| MS51992E803-(12 thru 64) | SF5902E803-(12 thru 64) | SL5902E803-(12 thru 64) |
| MS51992E804-11 | SFT5902E804-11 | SLT5902E804-11 |
| MS5199204-12 | SFT5902E804-12 | SLT5902E804-12 |
| MS51992E804-(13 thru 64) | SF5902E804-(13 thru 64) | SL5902E804-(13 thru 64) |
| MS51992E805-12 | SFT5902E805-12 | SLT5902E805-12 |
| MS51992E805-13 | SFT5902E805-13 | SLT5902E805-13 |
| MS51992E805-(14 thru 64) | SF5902E805-(14 thru 64) | SL5902E805-(14 thru 64) |
| MS51992E806-15 | SFT5902E806-15 | SLT5902E806-15 |
| MS51992E806-(16 thru 64) | SF5902E806-(16 thru 64) | SL5902E806-(16 thru 64) |
| MS51992E807-16 | SFT5902E807-16 | SLT5902E807-16 |
| MS51992E80W-(17 thru 64) | SF5902E807-(17 thru 64) | SL5902E807-(17 thru 64) |
| MS51992E808-18 | SFT5902E808-18 | SLT5902E808-18 |
| MS51992E808-(19 thru 64) | SF5902E808-(19 thru 64) | SL5902E808-(19 thru 64) |



*FASTENER DIMENSIONS, INC.* ISO9001, AS9100 & AS9120 Certified
6850 River Road, Pennsauken, New Jersey 08110
WEB: WWW.FASTDIM.COM • PHONE: 718-847-6321 • FAX: 718-847-8414

# Key-locked/Staked Studs and Inserts

Solid, one piece key-locked inserts and studs provide high resistance to torque-out and pullout in applications. To prevent rotation due to torsion or vibration, preassembled keys are driven down through the threads of the parent material mechanically locking the fasteners into place.

These products are superior for use in soft materials such as aluminum or magnesium when extra strength, extended thread life and vibration resistance are required. They have the option of self-broaching keys for hard material applications and are available with a variety of locking devices.

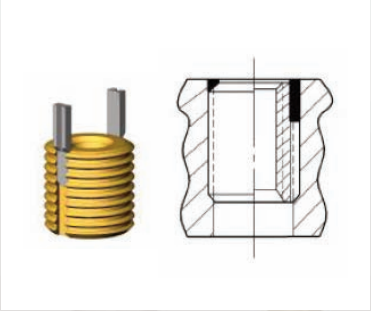

## Key-locked General Purpose Inserts

*(Keensert,® K-sert,® Stake-lock)*

*Lightweight Inserts*

| | |
|---|---|
| MS51830/NAS1394 | KN Series |
| | KNM Series *(metric)* |

*Heavy Duty Inserts*

| | |
|---|---|
| MS51831/NAS1395 | KNH Series |
| | KNHM Series *(metric)* |

*Extra Heavy Duty Inserts*

| | |
|---|---|
| MS51832 | KNHXH Series |

*Miniature Inserts*

| | |
|---|---|
| | KNC Series |
| | KNCC Series |
| | KNCA Series |
| | KNCM Series *(metric)* |

*Hydraulic 3000 psi Inserts*

| | |
|---|---|
| MS33649 + AS10050 | KNYD Series |

MIL-I-45914/M45914
NAS1394 – NAS1395
NAO146 – NAO151
TR29000-(X) Series

## Special Purpose Inserts

*High Strength Aluminum Inserts*

KNCE Series

*Cast-in Inserts*

BX Series

*Solid Inserts*

KNJ Series

*Floating Inserts*

KNK Series
KNKD Series

*Blind-end Inserts*

| | |
|---|---|
| KNCB Series | *Miniature* |
| KNB Series | *Lightweight* |
| KNHB Series | *Heavy Duty* |

*Special Locking Features*

TA24814-(XX)
TR26097-(XX)
TR29037-(XX)

*Floating inserts automatically compensate for misalignment of mating holes and are particularly useful on curved surfaces.*

*Fastener Dimensions Inc. is an independent distributor of the many brand name products that we sell and that appear in our literature.*

*Keensert® is a registered trademark of Alcoa® (AFS). **K-sert® is a registered trademark of Fastloc®.

*FASTENER DIMENSIONS, INC.* ISO9001, AS9100 & AS9120 Certified
6850 River Road, Pennsauken, New Jersey 08110
WEB: WWW.FASTDIM.COM • PHONE: 718-847-6321 • FAX: 718-847-8414

FASTENER DIMENSIONS

# KEY-LOCKED STUDS & INSERTS

AEROSPACE FASTENERS DISTRIBUTOR

## *Key-locked/Staked Studs and Inserts*

Key-locked inserts and studs are perfect for when you can't use a through-bolt/nut combination or when you need to quickly repair stripped, damaged or worn out threads. Since the stud or keyed end is installed into the parent material there is no need for removing or replacing a bolt.

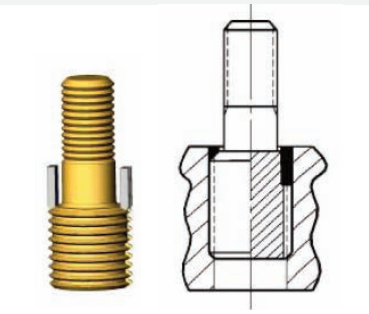

### Key-locked Studs

*(Keensert,® K-sert,® Stake-lock)*

MIL-S-45915/M45915
TR28000-(XX) Series
TR28001-(XX) Series
TR28110-(X)

*Sizes*

#10 through 1 inch
5mm–12mm

*Nut End Threads*

UNJF
UNJC
Metric

### General Purpose (Self-Broaching) Studs

*(Keensert,® K-sert,® Stake-lock)*

*Lightweight Studs*

| | |
|---|---|
| MS51833/NASM51833 | KNNS Series |
| | KNNMS Series *(metric)* |

*Heavy Duty Studs*

| | |
|---|---|
| MS51834/NASM51834 | KNHS Series |
| | KNHMS Series *(metric)* |

*Shear Load Studs*

| | |
|---|---|
| | KNS Series |
| | KNMS Series *(metric)* |

**SPECIAL TOOLING REQUIRED**

*FDI stocks kits and the entire line of tools for your applications.*

Key-locked inserts and key-locked studs are available in miniature, lightweight, and heavy-duty versions and are manufactured in all common aerospace materials including A286, alloy steels, 303 Cres, etc. We offer a full range of Inch and Metric sizes in coarse or fine pitch threads.

*Fastener Dimensions Inc. is an independent distributor of the many brand name products that we sell and that appear in our literature.*

*Keensert® is a registered trademark of Alcoa® (AFS). **K-sert® is a registered trademark of Fastloc®.

*FASTENER DIMENSIONS, INC.* ISO9001, AS9100 & AS9120 Certified
6850 River Road, Pennsauken, New Jersey 08110
WEB: WWW.FASTDIM.COM • PHONE: 718-847-6321 • FAX: 718-847-8414

FASTENER DIMENSIONS

# KEY-RING STUDS & INSERTS

AEROSPACE FASTENERS DISTRIBUTOR

## *Key-ring Inserts and Key-ring Studs*

Kelox® inserts and studs are high performance threaded products that typically require smaller diameter installation holes than other solid bushing inserts and studs. This translates into overall reduced boss sizes and weight savings. The Kelox® fasteners incorporate a pair of self-broaching keys joined by an integral ring that facilitates the driving of the keys into the structure.

While exhibiting the same features and benefits as standard key-locked inserts, Kelox® inserts and studs have internal ring attaching keys. This provides additional support while installing keys, but requires a small counterbore to allow the ring to sit flush with the top surface of parent material.

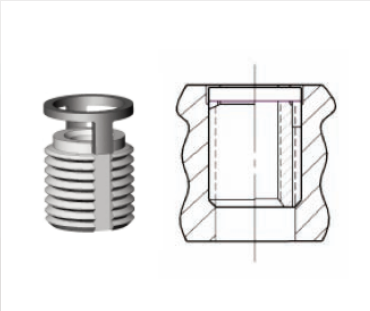

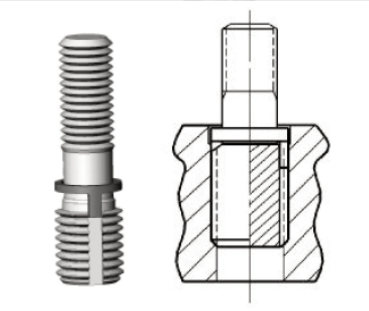

### Key-ring Inserts (Kelox®)

NAS1839–NAS1840
SL9202/4
SL9214/5
SL9208
SL9325
SL9211
69825-(XX)-(X)

### Key-ring Studs (Kelox®)

MIL-S-45933/1-(XX)
MIL-S-45933/2-(XX)
NAS1841–NAS1854
NAS1860–NAS1863
J1130P/31P-(XX)
J1172P-(XX)
J1179P-(XX)
J1196P-(XX)
J1206P/08P-(XX)
KL5510154-(XX)-(XX)
SL9301–SL9302
SL9304
SL9306
SL9308–SL9316
SL9320
SL9324
SL9328
V:002 889-(XX)
1798M81G
3020T29P-(XX)
4031T42P-(XX)
4058T30P-(XX)
5031T71P-(XX)
5046753P-(XX)
69544P14-(XX)
9977013–249G-(XX)

### Key-ring Features

- Products utilize high strength keys for self-broaching into harder materials
- Key-ring product is manufactured in a variety of materials including A286, Inconele® and Titanium.
- The key-ring is made from 420 Cres material that will self-broach in materials upto 40 HRC nut end thread.
- Internal thread locking features are available in each material type.

### Key-locked Assemblies

SLJ1216P04
SLJ970P03
SLJ970P04

Use Kelox® inserts and studs anywhere strong, long lasting threadforms are required in a variety of parent materials, such as magnesium and aluminum. Kelox® studs are an ideal solution when the use of standard bolts becomes impractical or impossible. Typical applications frequently include, but are not limited to, engine or power transmission components.

*Fastener Dimensions Inc. is an independent distributor of the many brand name products that we sell and that appear in our literature.*

*Kelox® is a registered trademark of Alcoa® (AFS). **Inconel® is a registered trademark of Incoalloys International.

*FASTENER DIMENSIONS, INC.* ISO9001, AS9100 & AS9120 Certified
6850 River Road, Pennsauken, New Jersey 08110
WEB: WWW.FASTDIM.COM • PHONE: 718-847-6321 • FAX: 718-847-8414

# Thinwall Swaged Inserts

Designed for applications requiring lightweight, high strength, compact spaces with a minimum boss. Swaged inserts' high performance benefits most applications requiring dependability in a lightweight solid wall insert. The locking knurl design is easy to install and provides high torque-out performance in soft and hard parent materials and are well-suited for electronics and aircraft engines.

## Swaged Inserts

AS3504/5
AS52760/63
AS52790/93
DOD-I-63274/1
EN3236/7
NSA5054

MIL-I-45932/1-(XX)-L
MIL-I-45932/1-(XX)
MIL-I-45932/2-(XX)-L
MIL-I-45932/2-(XX)
MIL-I-45932/3-(XX)-L
MIL-I-45932/3-(XX)

SRM-(XXX)
SRM-(XX)-L-(X)
SRMW-(X)-(X)
SRMW-(X)-L-(X)

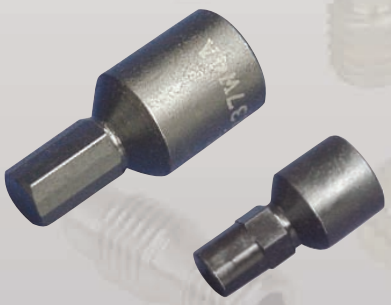

## Insert Removal Tools

MIL-I-45932/1
MIL-I-45932/3

## Clinch Nuts and Tools

MIL-N-45938/1
MIL-N-45938/3
MIL-N-45938/13
MIL-N-45938/14
DOD-N–70333/1
DOD-N–70333/2

## Slimsert™ Tools

SRM-(X)-D
SRMW-(X)-D
SRM-(X)-W
SRM-(X)-W2
SRM-(X)-S
SRMW-(X)-S
SRM-(X)-R

SRPBTM-(X)
SRWPBTM-(X)
SRPBTM-(X)-WB
SRM–GSD-(X)
SRMW–GSD-(X)
MK4SRM-(X)-AL (kits)
MK5SRM-(X)-BL (kits)

### *Sizes*

#4 through 1/2 inch
5mm–10mm

### *ID Threads*

UNJF
UNJC
Metric

### *Materials*

4130 Alloy Steel
A286
17-4 PH
Alloy 718
(Inconel® 718)

### *Finishes*

Cadmium
*per QQ-P-416 Type II, Class 2*
*Type III, Class 3*
Molybdenum Disulfide solid film lubricant
*per MIL-L-46010, Type I*
Silver
*per AMS2411 or QQ-S-365, Type II, Grade B*

All of our Inserts are manufactured to **MS**, **MIL-I**, **EN**, **NA**, **NAS**, **NASM** and **NSA** standards or they can be modified to meet your specific requirements.

*Fastener Dimensions Inc. is an independent distributor of the many brand name products that we sell and that appear in our literature.*
*Slimsert™ is a trademark of Alcoa® (AFS). **Inconel® is a registered trademark of Incoalloys International.

*FASTENER DIMENSIONS, INC.* ISO9001, AS9100 & AS9120 Certified
6850 River Road, Pennsauken, New Jersey 08110
WEB: WWW.FASTDIM.COM • PHONE: 718-847-6321 • FAX: 718-847-8414

# Straight and Stepped Studs

Straight and stepped studs are designed for minimum boss applications. The studs provide a lightweight, free running steel thread and are locked in place by an interference or tight fit with the tapped thread. Manufactured in alloy steel materials with cad plate finish. Some configurations are available with wrench flats on nut end thread area. Also available in various lengths of engagement.

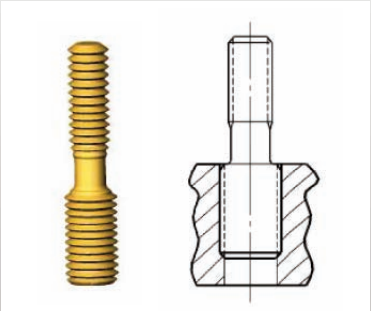

*(Interference or Tight-fit Studs)*

## Straight and Stepped Studs

AN151101 – AN152000
AN152301 – AN152600
AN153501 – AN153800
AN153801 – AN154100
AN154101 – AN154400
AN155601 – AN155900
AN156201 – AN156500

MS9827 – MS9840
MS17293 – MS17298

*FASTENER DIMENSIONS, INC.* ISO9001, AS9100 & AS9120 Certified
6850 River Road, Pennsauken, New Jersey 08110
WEB: WWW.FASTDIM.COM • PHONE: 718-847-6321 • FAX: 718-847-8414

# McKINNON & ROSAN® TOOLING

AEROSPACE FASTENERS DISTRIBUTOR

McKinnon tools are used for many commercial and military aircraft programs. Fastener Dimensions offers the entire line of McKinnon Tools for Studs and Inserts, Ring Locked Fluid Adapters, Ring Locked Fluid Inserts, Thin-Wall Inserts, Key-Type Inserts and Studs and millions of other fasteners.

If you cannot find the tools you are looking for, or if the tool part number is unknown, please contact your sales representative with your ring locked fastener part number, and we will acquire any tools you need.

*Ring locked fluid fittings require special tooling for installation and removal.*
*FDI stocks the full line of tools for your applications.*

## SPECIAL TOOLING REQUIRED

- Tool Kits
- O-Ring Installation Tools
- Drive Wrenches
- Broaching Tools
- Porting Tools
- Chip Removal Tools
- Lock Ring Drive Tools
- Lock Ring Drive Tools and Wrenches
- Stud Removal Tools
- Stud Drive Tools
- Swage Tools
- Insert Gauges
- Step Drills
- Wrench and Drive Tool Combination Tools
- Shipping Caps for Fluid Fittings
- Insert Installation Tools
- Key Ring Insert Tools
- Key Ring Stud Tools
- Fluid Adapter Installation Tools

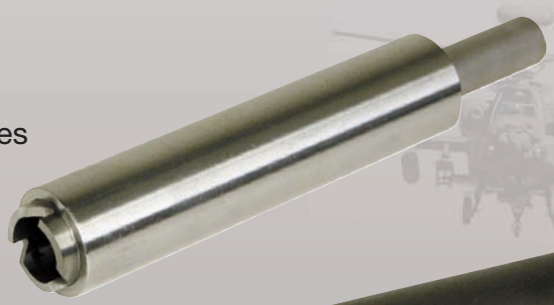

At Fastener Dimensions, the tool you are looking for is either in stock, or just a short lead time away.

*Rosan® is a registered trademark of Alcoa® (AFS).

*FASTENER DIMENSIONS, INC.* ISO9001, AS9100 & AS9120 Certified
6850 River Road, Pennsauken, New Jersey 08110
WEB: WWW.FASTDIM.COM • PHONE: 718-847-6321 • FAX: 718-847-8414

FASTENER DIMENSIONS

DISTRIBUTED PRODUCTS

AEROSPACE FASTENERS DISTRIBUTOR

# RING LOCKED HYDRAULIC FITTINGS

*FASTENER DIMENSIONS, INC.* ISO9001, AS9100 & AS9120 Certified
6850 River Road, Pennsauken, New Jersey 08110
WEB: WWW.FASTDIM.COM • PHONE: 718-847-6321 • FAX: 718-847-8414

# HYDRAULIC FLUID FASTENERS

AEROSPACE FASTENERS DISTRIBUTOR

Now Shur-Lok® Company is applying its talents and respected Ring Locked brand name to the design and manufacture of hydraulic fittings and fluid adaptors. Fittings will not rotate when connecting fluid lines to engine housings, gearboxes, manifolds...etc. Unlike heavier MS fittings that require a lockwire to prevent rotation, fluid fittings are held in place by a serrated lock-ring.

These fitting are designed to meet the demanding applications of aircraft and helicopter Fuel Systems, Landing Gear, Engines, APU's and any other high pressure fluid application.

## RING-LOCKED FLUID FASTENERS

AS1001-AS1040
AS1299
AS1581-AS1582
AS1790-AS1792
AS1985
AS1986
AS3077
AS3078
AS4099
AS4130-AS4542
AS5103
AS5178
AS5194-AS9905
AS5368
AS5550
AS5790
AS5865
AS5986

SLF2002
SLF3002
SLF3004

MA2111
MA2112
MA2113
MA2119
MA4248

EN3207
EN3248
EN3270
EN3566

NSN4730-(XX)-(XXX)-(XXXX)
NSN5330-(XX)-(XXX)-(XXXX)

Shur-Lok® is a registered trademark of the Shur-Lok Company.

*Ring locked fittings provide the most secure means of makng fluid lines connections when reliable performance is essential.*

## SPECIALS

ABS0920
ABS0993
C7579
HS4751
J1348P
J1037P
ST7M200

7D0109
7D0164T
104-538
4189T38
5086T04P
5148T68P
7017-491615

Fastener Dimensions, Inc. stocks a complete line of Beam Seal Adapters, Flareless Adapters, Flared Adapters, Fluid Plugs, Insert Lockrings, Fluid Boss Inserts, Fluid Fitting Caps, and Installation and Removal Tools (available in both SAE and in Metric sizes where applicable).

We stock hardware from over 1000 manufacturers, with multiple authorized lines. Fastener Dimensions is the largest distributor of Rosan® hardware in the world.

*FASTENER DIMENSIONS, INC.* ISO9001, AS9100 & AS9120 Certified
6850 River Road, Pennsauken, New Jersey 08110
WEB: WWW.FASTDIM.COM • PHONE: 718-847-6321 • FAX: 718-847-8414

FASTENER DIMENSIONS

# HYDRAULIC FLUID FASTENERS

AEROSPACE FASTENERS DISTRIBUTOR

## ALOCA/ROSAN BOSS FLUID ADAPTERS

*FDI is a distributor of the Rosan® fluid fitting line for over 25 years. We now offer equivalent products as well. These products can usually be offered at a reduced cost compared to the Alcoa product group. They have already been approved by most Aircraft OEM's.*

VSF1015
RF50-(XX)-13
RF5000-(XX)-13
RF50-(XX)-(XX)-(XX)
RF5005-(XX)-(XX)
RF5006-(XX)-(XX)
RF5010-(XX)-(XX)
RF5012-(XX)-(XX)
RF5016-(XX)-(XX)
RF5020-(XX)-(XX)
RF5024-(XX)-(XX)
RFK98-(XX)-13
RFK99-(XX)-13
RF9804-(XX)-(XX)
RF9805-(XX)-(XX)
RF9806-(XX)-(XX)
RF9808-(XX)-(XX)
RF9810-(XX)-(XX)
RF9812-(XX)-(XX)
RF9814-(XX)-(XX)
RF9816-(XX)-(XX)
RF9820-(XX)-(XX)
RF9824-(XX)-(XX)
RFR95-(XX)-(XX)-504
RFS95-(XX)-504
RF-(XX)5000-(XX)
RFH7500-(XX)
RF7500-(XX)
RF9500-(XX)
RFKA99-(XX)-(XX)-13
RZA12357-(XX)EO357
RZA12428-13
RZA12427-13
RZA12132-13
RZA12131-13
7017-49-(XXXX)-(XX)
6660-49-(XXXX)-(XX)
6520-49-(XXXX)-(XX)
7027-49-(XXXX)-(XX)
6828-49-(XXXX)-(XXX)

*Rosan® is a registered trademark of Alcoa® (AFS).

*Shipping caps for fluid fittings are available in a wide assortment and sizes. These shipping caps are crucial to insure nothing can get into your assembly during shipping or in long term storage.*

## SPECIAL TOOLING REQUIRED

*Ring locked fluid fittings require special tooling for installation and removal. FDI stocks the full line of tools for your applications.*

| Fluid Fittings / Operating Pressure | Beam Seal Adapter | Flareless Adapter | Flared Adapter | Spherical Flared Adapter | Beam Seal Reducer Adapter | Flareless Reducer Adapter | Flared Reducer Adpter | Plug Adapter | Fluid Boss Insert |
|---|---|---|---|---|---|---|---|---|---|
| | | | | | | | | | |
| 3000 psi | ▬ | ▬ | ▬ | ▬ | ▬ | ▬ | ▬ | ▬ | ▬ |
| 4000 psi | ▬ | ▬ | ▬ | | ▬ | ▬ | | ▬ | |
| 5000 psi | ▬ | | ▬ | | ▬ | ▬ | | ▬ | |
| 8000 psi | ▬ | | | | | | | | |

*FASTENER DIMENSIONS, INC.* ISO9001, AS9100 & AS9120 Certified
6850 River Road, Pennsauken, New Jersey 08110
WEB: WWW.FASTDIM.COM • PHONE: 718-847-6321 • FAX: 718-847-8414

## RING-LOCKED FLUID FASTENERS PART NUMBER CROSS REFERENCE

| Shur-Lok P/N | Alcoa P/N | SAE Spec. | Description |
|---|---|---|---|
| | | | **Flareless:** |
| SLAS1299-XX | RF99XX-13 | AS1299 | 3000PSI flareless |
| SLAS4099-XX | RFK99XX-13 | AS4099 | 4000PSI flareless |
| SLAS4099-06SP4 | 167013510-06 | SPL | flareless, spcl |
| SLAS4099-16SP5 | 167013511-16 | SPL | |
| SLAS4099-20SP6 | 167013512-20 | SPL | |
| SLAS5550-XX | RFKA99XX-13 | AS5550 | 5080 PSI flareless |
| SLAS5865-XX-XX | RFKA99XX-XX-13 | AS5865 | 5080 PSI flareless reducer |
| SLF2002-XX-XX | RF99XX-XX-13 | SPL | flareless reducer |
| | | | **Beam seal:** |
| SLAS1986-XX | RF50XX-13 | AS1986 | 4000 & 5000PSI beam seal |
| SLAS5986-XX | RF50XX-63 | AS5986 | 4000 & 5000PSI beam seal, dry film lube |
| SLAS1986RJ-XX | RF50XX-62 | SPL | beam seal, dry film lube on tit. fitting |
| SLAS1986RK-XX | RF50XX-16 | | beam seal, 17-4PH dry film lube fitting |
| SLAS1986-XXSP3 | RZA12357XXE0357 | | microseal 100-1, 8microinch finish on beam |
| SLAS4383-XX-XX | RF50XX-XX-13 | AS4383 | Reducer, 5000PSI beam seal |
| SLF1021-XX-XX | RF57XX-XX-13 | SPL | solid reducer, beam seal |
| | | | **Flared:** |
| SLAS1985-XX | RFK98XX-13 | AS1985 | 4000PSI flared |
| SLF3003-XX | RF98XX-13 | AS5368 | 3000PSI flared |
| SLAS5368-XX | RFGA98XX-19 | | Ball nose |
| SLF3004-XX-XX | RF98XX-XX-13 | | flared reducer |
| | | | **Fluid boss insert:** |
| SLAS3078-XX | RF95XX-504 | AS3078 | fluid boss insert |
| SLF5002-XX | RF95XX-505 | SPL | fluid boss insert, titanium |
| SLF8500C-XX | RF85XX-504 | | fluid boss insert, old design |
| SLAS3077-XX | RLT95XX-24 | AS3077 | lockring, fluid boss insert |
| SLF8500R-XX | RL85XX-24 | SPL | lockring, fluid boss insert, old design |
| SLF8500-XX | RF85XX-6 | | assy, fluid boss insert & lockring, old design |
| | | | **8000 PSI:** |
| SLAS4200-XX | RFH50XX-13 | AS4200 | 8000PSI beam seal |
| SLF1022-XX | RFH50XX-18 | SPL | 8000PSI beam seal, 17-4PH fitting lube fitting |
| TBD | RFH99XX-13 | | 8000PSI flareless |
| | | | **Spherical flared:** |
| SLAS5368-XX-GE | RFGA98XX-19 | AS5368 | 3000PSI spherical flared, A286 fitting |
| SLF3002-XX-XX | RFG98XX-XX-19 | SPL | reducer, spherical flared, A286 fitting |
| SLAS5368-12-10NB | RFGA98XX-XX-71 | | reducer, spherical flared, Inc 718 fitting |
| SLFG68-XXFM | RFG98XX-19 | | spherical flared, A286 fitting |
| | | | **Specials:** |
| SLAS5103-XX | RF75XX | AS5103 | Plug, 4000 & 5000PSI beam seal |
| SLF1015-08 | RZA12428-13 | SPL | tube end per dynatube coupling |
| SLF1016-08 | RZA12427-13 | | tube end per dynatube coupling |
| SLF2008-08 | RZA12132-13 | | reducer, flareless, special |
| SLF2009-08 | RZA12131-13 | | |
| SLF2012-XX-XX | 6680-133XX | | reducer, flareless, special, metric end @ tube |
| SLF2013-XX | RZA12952 | | flareless, solid, spcl |
| SLF2014-XX | RZA12364 | | flareless, spcl |
| SLF1017-XX | RFBK50XXA13 | | Bulkhead fitting assy |
| | | | **Metric:** |
| SLMA2111-XX | 7017-49XXXX-XX | MA2111 | Metric, 4000PSI beam seal |
| SLMA2112-XX | 6660-49XXXX-XX | MA2112 | Metric, 4000PSI flareless |
| SLMA2113-XX | 6520-49XXXX-XX | MA2113 | Metric, 4000PSI 60 deg. Flareless |
| SLMA2119-XX-XX | 7027-49XXXX-XX | MA2119 | Metric, Reducer, 4000PSI beam seal |
| SLEN3270-XX | 6828-49XXXX-XXX | EN3270 | Metric, Plug |

*FASTENER DIMENSIONS, INC.* ISO9001, AS9100 & AS9120 Certified
6850 River Road, Pennsauken, New Jersey 08110
WEB: WWW.FASTDIM.COM • PHONE: 718-847-6321 • FAX: 718-847-8414

FASTENER DIMENSIONS

# DISTRIBUTED PRODUCTS

AEROSPACE FASTENERS DISTRIBUTOR

12 Pt. Nuts

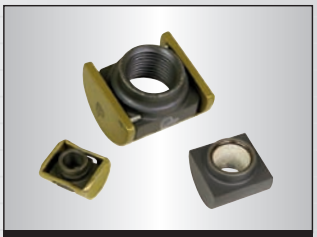
Barrel Nuts

Castle Nuts

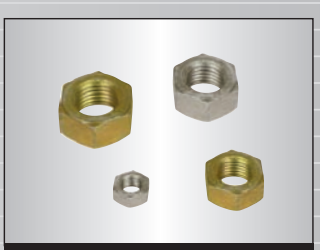
Chamfer Top Nuts

Clinch Nuts

Dome Nuts

Flexlock® Nuts

Gang Channels

Heavy Hex and Flange Nuts

Jam Nuts

Nut Plates

Self-locking Nuts

Shank Nuts

Spline Nuts

Wing Nuts

# NUTS

*FASTENER DIMENSIONS, INC.* ISO9001, AS9100 & AS9120 Certified
6850 River Road, Pennsauken, New Jersey 08110
WEB: WWW.FASTDIM.COM • PHONE: 718-847-6321 • FAX: 718-847-8414

## 12 Pt. Nuts *in accordance w. MIL-N-25027*

AS3397
307A9215

NAS1727
NAS1727C
NAS1804
NAS1805

## Barrel Nuts Series

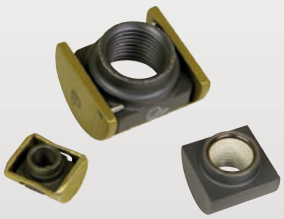

| | |
|---|---|
| SL50 | Barrel Nut, Self-locking, Floating, 180 KSI [1241 MPa] |
| SL50MJ | Barrel Nut, Self-locking, Floating, 180 KSI [1241 MPa] |
| SL405 | Barrel Nut, Self-locking, Floating, 220 KSI [1517 MPa] |
| SL414 | Barrel Nut, Self-locking, 220 K SI [1517 MPa] |
| SL414MJ | Barrel Nut, Self-locking, 220 KSI [1517 MPa] |
| SL4001 | Barrel Nut, Non-magnetic, Self-locking, Floating, 220 KSI [1517 MPa] |
| SL4005 | Barrel Nut, Non-magnetic, Lightweight, Self-locking, Floating, 220 KSI [1517 MPa] |
| SL4200 | Barrel Nut, Self-locking, Non-metallic Lock, 180 KSI [1241 MPa] znd 220 KSI [1517 MPa] |
| SLR5 0 | Retainer, Floating Barrel Nut |
| SLR414 | Retainer, Barrel Nut |
| SLR4001 | Retainer, Floating Barrel Nut |

## Castle Nuts

AN310
AN315
AN316
AN320

MS35649
MS35650

## Chamfer Top Lock Nuts

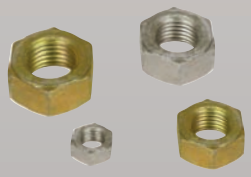

M45913/2
M45913/4

*FASTENER DIMENSIONS, INC.* ISO9001, AS9100 & AS9120 Certified
6850 River Road, Pennsauken, New Jersey 08110
WEB: WWW.FASTDIM.COM • PHONE: 718-847-6321 • FAX: 718-847-8414

# DISTRIBUTED PRODUCTS

AEROSPACE FASTENERS DISTRIBUTOR

## Clinch Nuts

AN310

NASM45938/5
NASM45938/8

## Dome Nuts

NAS1473
NAS1474

## Floating Nut Plates

NAS1791
NAS1792

NASM21059
NASM21060
NASM21061
NASM21062
NASM21075
NASM210761

## Flexloc® Nuts

AN364
AN365

MS20364
MS20365
MS20500

MS21045
MS21046

NAS1021
NAS1022
NASM25027

MIL-DT
MIL-N-7873

SPS-N-111
SPS-N-631
SPS-N-684

## Gang Channels

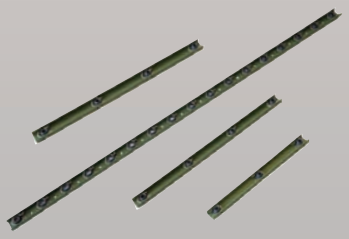

NAS1783

MS21063
MS21064
MS21064L
MS21065
MS21065L

*FASTENER DIMENSIONS, INC.* ISO9001, AS9100 & AS9120 Certified
6850 River Road, Pennsauken, New Jersey 08110
WEB: WWW.FASTDIM.COM • PHONE: 718-847-6321 • FAX: 718-847-8414

## Heavy Hex and Flange Nuts

NASM16228

NASM21042
NASM21043

## Jam Nuts

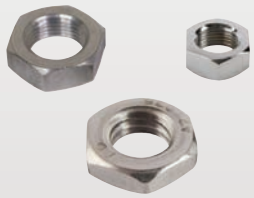

11416NFJBRS
12288774
1418NPT
2601814-001
4G14643-101A
5.31001E+12
5811NFJALUM
6918896
70400-02267-103

AA52427
AA55628
AA55629

AN310
AN315
AN316
AN320
AN340

AS5178-7
AS5178D6

B18295B5

BACN1U6CD2RN

D1-4426

MS1692-525CE
MS1692-587
MS1692-621CE
MS3186A109A
MS16203
MS16285
MS16286
MS17187
MS21304
MS21340
MS24679
MS24680
MS25082
MS27040
MS27952
MS35649
MS35650
MS35690
MS35691
MS35692
MS45905
MS51469
MS51470
MS51471
MS51472
MS51473
MS51858
MS51860
MS51865
MS51922
MS51967

MS51968
MS51970
MS51971
MS51972
MS51983
MS51984

NAS509
NAS671
NAS1423

NASM35649
NASM35650
NASM310
NASM315
NASM316
NASM320

12288774
12387151
12387277
12387303
12387305

**Procurement Specification**

FF-N-836E

MIL-DTL-1222J
MIL-DTL-45913/2
MIL-DTL-45913/4

*FASTENER DIMENSIONS, INC.* ISO9001, AS9100 & AS9120 Certified
6850 River Road, Pennsauken, New Jersey 08110
WEB: WWW.FASTDIM.COM • PHONE: 718-847-6321 • FAX: 718-847-8414

## Self-locking Nuts

AN363
ASAS3397
AS42910 – AS42915
AS64366 – AS64374
MA3429
MS14144
MS14145
MS14156
MS14164 (NASM14164)
MS14182 (NASM14182)
MS17825
MS17826
MS20500
MS20501
MS21042 – MS21065
MS21069 – MS21076
MS21083 – MS21087
MS21133 (NASM8985)
MS21225
MS21245 – NAS679
NAS687
NAS696 – NAS698
NAS1022 – NAS1028
NAS1031 – NAS1033
NAS1067
NAS1068
NAS1288
NAS1291
NAS1473
NAS1474
NAS1727
NAS1727C
NAS1734
NAS1735
NAS1765
NAS1766
NAS1770 – NAS1779
NAS1791
NAS1792
NAS1794
NAS1795
NAS1803 – NAS1805
NAS1870
NASM8985 (MS21133)
NASM14164 (MS14164)
NASM14182 (MS14182)
NASM25027 (MIL-N-25027) (Airbus NSA5470)
NSA5471
NSA5473

## Shank Nuts

AS27852 – AS27880
AS44750 – AS44753
AS54471
AS62300 – AS62349
AS63540-89
AS63477
MA3433
EN2911

## Spline Nuts

AS64366-374
MA3429
NASM14164 MS14164
NASM14182 MS14182
MS21084
MS21085
MS21133

## Wing Nuts

AN350
MS35425
MS35426

*FASTENER DIMENSIONS, INC.* ISO9001, AS9100 & AS9120 Certified
6850 River Road, Pennsauken, New Jersey 08110
WEB: WWW.FASTDIM.COM • PHONE: 718-847-6321 • FAX: 718-847-8414

FASTENER DIMENSIONS

# E-NUT® FASTENING SYSTEMS

AEROSPACE FASTENERS DISTRIBUTOR

## *E-Nut® Fastening Systems*

Time-saving E-Nuts are the perfect substitute for most styles of floating nuts and rivets that usually cause FOD. There is no need for special tools or operators since E-Nuts simple collet and screw design only requires the use of a screwdriver. E-Nuts are a top-down fastening system and are self-expanding, self-alligning, self-locking, rapidly removable, and are reusable.

### *Suitable Applications*

- Replacement of riveted and non-riveted nut plates
- Floorboards
- Blind Fastener
- Clamps for wire harness
- Clamps for hydraulic lines

*Installation Profile View*

### *Benefits*

- Significant weight savings
- Reduced installation costs
- High strength (shear/fatigue)
- Top-down installation
- Exceeds float requirements
- Tolerates angular misalignment
- Accommodates a range of material depths
- Multi-grip capabilities
- System can be installed in Composite, Aluminum, Stainess Steel, and Titanium structures
- Qualified for major programs and various applications
- Installation modifications or special tools are not necessary

*The Collet has Flexible Legs, is stepped to lock in place, and has a Hex on top to prevent anti-rotation.*

*The Insert has an Internal Hex to prevent anti-rotation.*

*Fastener Dimensions Inc. is an independent distributor of the many brand name products that we sell and that appear in our literature.*

*E-Nut Fastening System® is a registered trademark of Avibank® Manufacturing Inc., SPS Fastener Division, a PCC Company.

*FASTENER DIMENSIONS, INC.* ISO9001, AS9100 & AS9120 Certified
6850 River Road, Pennsauken, New Jersey 08110
WEB: WWW.FASTDIM.COM • PHONE: 718-847-6321 • FAX: 718-847-8414

# PANEL FASTENERS & SPACERS

AEROSPACE FASTENERS DISTRIBUTOR

**Sandwich structure fasteners**, also known as potted-in inserts, are panel fastener that are engineered to be mechanically installed in honeycomb and sandwich panel structures. They are designed for aircraft interior main structures and are also ideal for use in the fabrication of aircraft interior secondary structures, such as: floor boards, wall panels, galleys, lavatories, stow bins, and over-head compartments.

Fastener Dimensions carries all of the available designs and configurations. **Insert types** include threaded or non-threaded, through or blind, locking or non-locking styles.

Our easily-installed **floating inserts** feature a unique, self-contained, floating nut located in the insert that compensates for screw misalignment.

**Spacers** are designed to be installed in structural applications and are often used in aircraft floors. Two different systems of spacers can be had and are available as either a one-piece sleeve or a two piece system with a plug and a sleeve. As a way to increase shear load capacity, spacers are frequently installed with epoxy under the flange.

*Sandwich structure panel fasteners*

*Panel fasteners are used across the entire interior of both cargo and passenger aircrafts. They can be found in all interior panels, overhead storage bins, floor boards, and lavatories.*

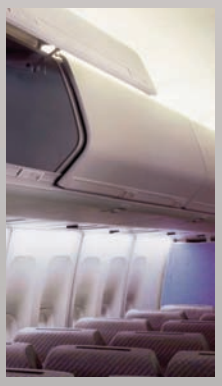

| ***Sandwich Inserts*** | **Through Clearance** | | | **Floating Nut Element** |
|---|---|---|---|---|
| | **Non-Threaded** | **Non-Threaded** | **Threaded** | |
| ***Features and Benefits*** | | | 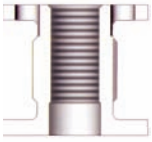 | |
| **Installation: Mechanical or Potted** | **Mechanical** | **Potted** | **Potted** | **Potted** |
| **Inserts for Metallic Face Skins** | ✓ | ✓ | | |
| **Adjustable Spacers for all Panels** | ✓ | ✓ | | |
| **Inserts for all Panels** | | ✓ | ✓ | ✓ |
| **Inserts for Space and Satellite Panels** | | ✓ | ✓ | |

*FASTENER DIMENSIONS, INC.* ISO9001, AS9100 & AS9120 Certified
6850 River Road, Pennsauken, New Jersey 08110
WEB: WWW.FASTDIM.COM • PHONE: 718-847-6321 • FAX: 718-847-8414

FASTENER DIMENSIONS

# PANEL FASTENERS & SPACERS

AEROSPACE FASTENERS DISTRIBUTOR

## Advanced Composite Panel Fasteners

For fiber-reinforced panels, Fastener Dimensions Inc. stocks panel fasteners engineered to mount to advanced composite structures. Designed to withstand localized concentrated loading, they offer galvanic compatibility, resist hold-edge crushing, vibrations, and water absorption, and are known to exhibit fewer issues with interference fit.

*Types we offer:* bonded-on, bonded mechanical and nonmetallic potted-in.

B**onded-on types** include studs and insert plates supplied with pre-attached thermoplastic adhesive. The adhesive is melted by applying heat to the fastener.

B**onded mechanical types** utilize a combination of adhesive, as well as, mechanical means for retention in the structure.

**Nonmetallic inserts and spacers** (sleeves and plugs) are primarily designed to be mounted to sandwich structures. They are made mostly of polyetherimide, a very lightweight material, which is non-reactive with current composites.

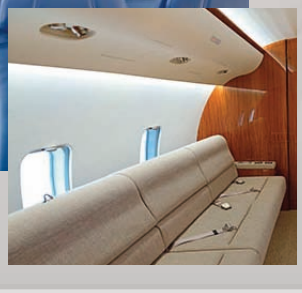

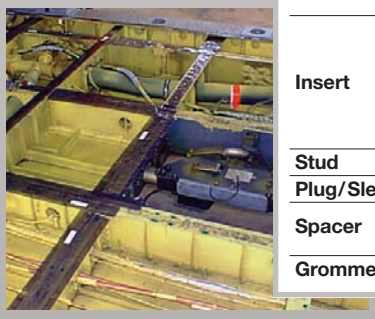

| *Fasteners for Advanced Composites* | | Adhesive Bonded/ Mechanical | Adhesive Bonded/ Mechanical | Thermal Bonded |
|---|---|---|---|---|
| | *Features and Benefits* | | | 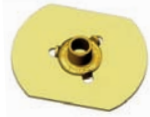 |
| Insert | Through Threaded | ● | | ● |
| | Countersunk Clearance Hole | ● | ● | |
| | Floating Nut | | | ● |
| | Non-Floating Nut | | | ● |
| | Lightweight, Self-Locking, for Thin Panel | | | ● |
| Stud | | | | ● |
| Plug/Sleeve | Floor Panel Plug and Sleeve Bonded | ● | ● | |
| Spacer | Flared | ● | ● | |
| | Flush Mount | | ● | |
| Grommet | Flared, Thermal Bond | ● | | |

*FASTENER DIMENSIONS, INC.* ISO9001, AS9100 & AS9120 Certified
6850 River Road, Pennsauken, New Jersey 08110
WEB: WWW.FASTDIM.COM • PHONE: 718-847-6321 • FAX: 718-847-8414

FASTENER DIMENSIONS

# AEROSPACE BUSHINGS AND SPACERS

AEROSPACE FASTENERS DISTRIBUTOR

Aerospace Bushings and Spacers are available in many different styles, thicknesses, diameters and material. FDI stocks Bushings and Spacers in a variety of different finishes and lengths and strength capabilities. Part number types usually consist of AN, NAS, MS, NASM, AS, HS, SS and BACB. Fastener Dimensions has the ability to deliver any of the bushings and spacers listed within these pages if they're not already in stock, ready to ship today. If you don't see the part number series here, call us today.

## AERITALIA

NTA14451
NTA14452
NTA14453
NTA14454

## BAE LAND SYSTEMS

8240322

## BARRY CONTROLS

10-9174-02

## BELL HELICOPTER

20-037
20-048
21-003 through 024
21-025 through 032
22-003 through 024
120-013
212-010-769-1

## BOEING

66-12688
66-15332
69-43294
112A2901
113A3327
113N3112
141A6809
161W7010
162W1411
251W2135
302T0200
614W1632
S449W623
012T2400
17P1N1009
65B08013
65B21129
69-10316
69B00084
113A2653
113T1347
113W9312
114S2628
114T0121
116A7701
116A7702
116A8493
116W4113
141A6809
146A6418
148T8223
161A1115
161A1119
161A1124
161A1197
161A2109
161T6044-3
161W1118
161W2118-4
169Z7834-1
181A1301
251T1150
251T3742-41
252T1150
256A9164
272A9161
272A9162
421W4551
BACB28AA
BACB28AK
BACB28AM
BACB28AP
BACB28AT
BACB28AU
BACB28AW
BACB28AX
BACB28AY
BACB28B
BACB28BA
BACB28BB
BACB28BC
BACB28BG
BACB28BL
BACB28T
BACB28U
BACB28W
BACB28X
BACB28Y
BACB28Z
BACS18BA
BACS18K
ML309E

## BOEING MESA

HS606
HS4173
HS5542

## BOEING ST. LOUIS (McDONNEL AIRCRAFT)

4D0004
4D0014
4D0025
4D0032
4D0036
4M43
4M45
4M46
4M98
4M106
4M108
4M130
4M139
4M144
4M166
4M167
4M268
4M277
4M279
4M313
4M332
4M369
4M374
4M386
68A327185
ST4M124
ST4M130
ST4M144
ST4M166
ST4M167
ST4M219

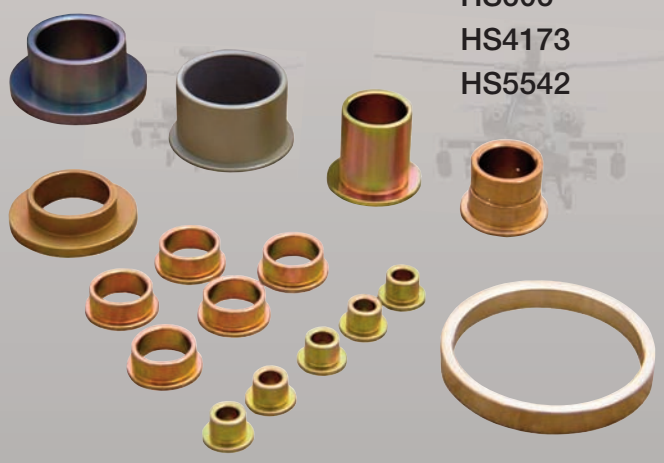

*FASTENER DIMENSIONS, INC.* ISO9001, AS9100 & AS9120 Certified
6850 River Road, Pennsauken, New Jersey 08110
WEB: WWW.FASTDIM.COM • PHONE: 718-847-6321 • FAX: 718-847-8414

FASTENER DIMENSIONS

# AEROSPACE BUSHINGS AND SPACERS

AEROSPACE FASTENERS DISTRIBUTOR

## BOMBARDIER
B0309008
B0309009
B0309012
B0309013
B030901
B0309015
B0309016
B0309017
B0309018
B0309019
B0309026
B0309027
B0309028
B0313026
S10008

## FAIRCHILD
S5004

## GE
L25572
1301M99
1306M25
1336M45
2090M81
3009T95
3034T82
4127T49
4138T65
9009M14
9116M61
9193M69
9971M79

## DOUGLAS AIRCRAFT
4D0002
4D0004
4D0008
4D0014
4D0026
4D0032
4D0035
4D0036
4D0085
4D0104
4D0138
4D0149
4D0159
17N6P0641
17P2A3921
17P8N1019
LD137-0048
S2062646
S2210366
S2210370
S2210371
S2431215
S2431263
S4922798
S4922799
S4928911
S4928912

## GENERAL DYNAMICS (LOCKHEED)
16M208
16T7410

## GOODRICH/ROHR
7425159
S700B0115
S700B0116
S700B0348
S700B0455
S700B0521
S700B1211
S700B1389
S700B1422
S700B1696
S700S

## GRUMMAN
G423
GB10C
GB10E

## GULFSTREAM
GAB10A
GAB10B
GAB10C
GAB10E
GAB10F
GAB10G
GAB10H
GAB10V

## HONDA JET
HJDS-0002

## LOCKHEED MARTIN
LS3859

## MCDONNEL DOUGLAS: HUNTINGTON BEACH
1G04067

## MCDONNEL DOUGLAS HELICOPTER
HS606

*FASTENER DIMENSIONS, INC.* ISO9001, AS9100 & AS9120 Certified
6850 River Road, Pennsauken, New Jersey 08110
WEB: WWW.FASTDIM.COM • PHONE: 718-847-6321 • FAX: 718-847-8414

FASTENER DIMENSIONS

# AEROSPACE BUSHINGS AND SPACERS

Aerospace Fasteners Distributor

## NATIONAL AEROSPACE STANDARD (NAS)

NAS42
NAS43
NAS47
NAS61
NAS72
NAS73
NAS74
NAS75
NAS76
NAS77
NAS186
NAS357
NAS537
NAS538
NAS1056
NAS1057

## MILITARY STANDARD (MS)

MS9012
MS9016
MS9017
MS14237
MS14237A
MS14238
MS14238A
MS17319
MS21902
MS21921
MS35689
MS35771
AS14237
AS14238

## NAVY

3929AS1420
320537

## NORTHROP

6-41663

## PRATT & WHITNEY

5313024SK01
ST3323

## PSI BEARINGS

P528AZ34D063
PT528AZ22D072

## RAYTHEON

2275656
498166
4212236
6386396

## ROCKWELL

580-1497
580-0036
830-2144
LD137-0040

## ROCKWELL COLLINS

987-2732-002
987-2732-003

## ROHR/GOODRICH

S700B0115
S700B0116
S700B0348
S700B0455
S700B0521
S700B1211
S700B1389
S700B1422
S700B1696

## ROLLS ROYCE

DKH38142

## SAFRAN

339-03332-01
339-03334-01

## SIKORSKY

76209-02019
SS4007

## UNITED TECHNOLOGY

ST1684

## US ARMY

12274423
12007955

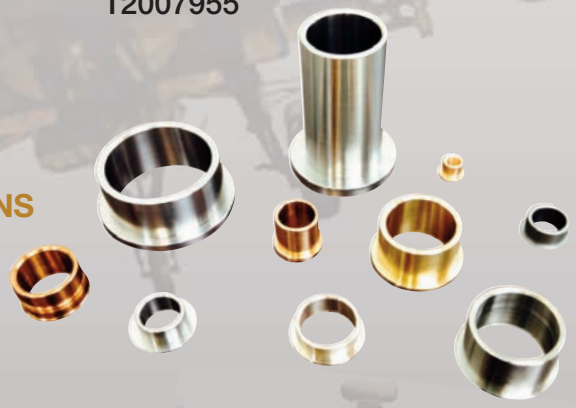

## MISCELLANEOUS

69B
AN834
AN893
GB10
NA0180
NA0181
NA0182
NA0183
LD137
LS10020
LS11164
LS2326
LS35085
LS35352
LS3859
S1026614
S1641717

*FASTENER DIMENSIONS, INC.* ISO9001, AS9100 & AS9120 Certified
6850 River Road, Pennsauken, New Jersey 08110
WEB: WWW.FASTDIM.COM • PHONE: 718-847-6321 • FAX: 718-847-8414